STFILED625, STPLED625

N-channel 620 V, 1.28 Ω typ., 5.0 A Power MOSFET in I²PAKFP and TO-220 packages

Datasheet — preliminary data

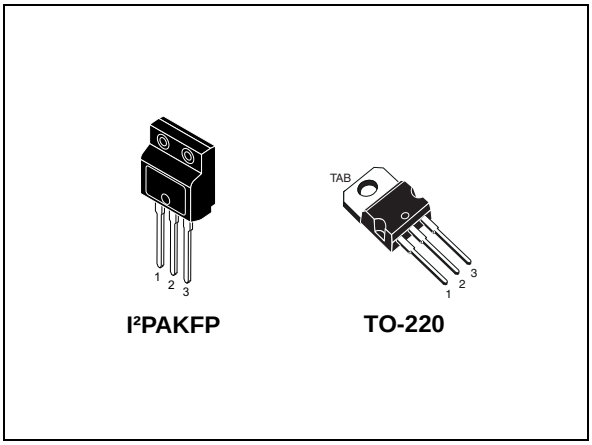

Figure 1. Internal schematic diagram

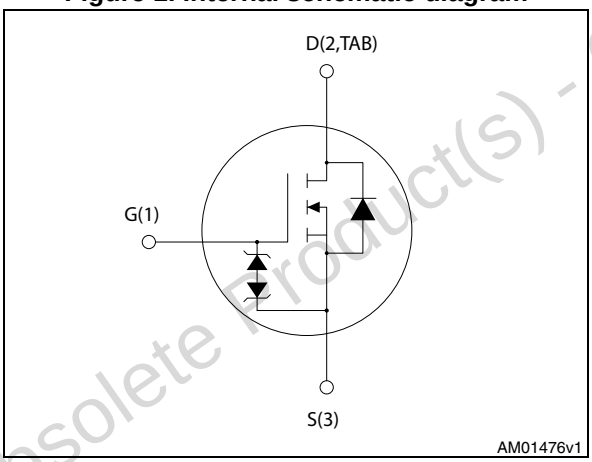

Features

Order codes	V_{DS}	$R_{DS(on)}$ max	I_D	P_{TOT}
STFILED625	620 V	1.6 Ω	5.0 A	25 W
STPLED625				70 W

- 100% avalanche tested
- Extremely high dv/dt capability
- Gate charge minimized
- Very low intrinsic capacitance
- Improved diode reverse recovery characteristics
- Zener-protected

Applications

- LED lighting applications

Description

These Power MOSFETs boast extremely low on-resistance and very good dv/dt capability, rendering them suitable for buck-boost and flyback topologies.

Obsolete Product(s) - Obsolete Product(s)

Table 1. Device summary

Order codes	Marking	Package	Packaging
STFILED625	LED625	I²PAKFP (TO-281)	Tube
STPLED625		TO-220	

This is preliminary information on a new product now in development or undergoing evaluation. Details are subject to change without notice.

www.st.com

Contents

1 Electrical ratings 3

2 Electrical characteristics 4

2.1 Electrical characteristics (curves) 6

3 Test circuits 9

4 Package mechanical data 10

5 Revision history 14

Obsolete Product(s) - Obsolete Product(s)

1 Electrical ratings

Table 2. Absolute maximum ratings

Symbol	Parameter	Value		Unit
		I^2PAKFP	TO-220	
V_{DS}	Drain- source voltage	620		V
V_{GS}	Gate- source voltage	± 30		V
I_D	Drain current (continuous) at T_C = 25 °C	5.0(1)	5.0	A
I_D	Drain current (continuous) at T_C = 100 °C	3.5(1)	3.5	A
I_{DM} (2)	Drain current (pulsed)	20.0(1)	20.0	A
P_{TOT}	Total dissipation at T_C = 25 °C	70	25	W
I_{AR}	Avalanche current, repetitive or not-repetitive (pulse width limited by T_J max)	4.2		A
E_{AS}	Single pulse avalanche energy (starting T_J = 25 °C, I_D = I_{AR}, V_{DD} = 50 V)	120		mJ
dv/dt(3)	Peak diode recovery voltage slope	12		V/ns
di/dt(3)	Diode reverse recovery current slope	400		A/µs
V_{ISO}	Insulation withstand voltage (AC)	2500		V
T_J T_{stg}	Operating junction temperature Storage temperature	- 55 to 150		°C

1. Limited only by maximum temperature allowed
2. Pulse width limited by safe operating area
3. $I_{SD} \leq I_D$, peak $V_{DS} \leq V_{(BR)DSS}$, V_{DD} = 80% $V_{(BR)DSS}$

Table 3. Thermal data

Symbol	Parameter	Value		Unit
		I^2PAKFP	TO-220	
$R_{thj-case}$	Thermal resistance junction-case max	5	1.79	°C/W
$R_{thj-amb}$	Thermal resistance junction-amb max	62.50		°C/W

Obsolete Product(s) - Obsolete Product(s)

2 Electrical characteristics

(Tcase =25 °C unless otherwise specified)

Table 4. On /off states

Symbol	Parameter	Test conditions	Min.	Typ.	Max.	Unit
$V_{(BR)DSS}$	Drain-source breakdown voltage	I_D = 1 mA, V_{GS} = 0	620			V
I_{DSS}	Zero gate voltage drain current (V_{GS} = 0)	V_{DS} = 620 V V_{DS} = 620 V, T_C=125 °C			1 50	µA µA
I_{GSS}	Gate-body leakage current (V_{DS} = 0)	V_{GS} = ± 20 V; V_{DS}=0			±10	µA
$V_{GS(th)}$	Gate threshold voltage	V_{DS} = V_{GS}, I_D = 50 µA	3	3.6	4.5	V
$R_{DS(on)}$	Static drain-source on resistance	V_{GS} = 10 V, I_D = 2.1 A		1.28	1.6	Ω

Table 5. Dynamic

Symbol	Parameter	Test conditions	Min.	Typ.	Max.	Unit
C_{iss} C_{oss} C_{rss}	Input capacitance Output capacitance Reverse transfer capacitance	V_{DS} = 50 V, f = 1 MHz, V_{GS} = 0	-	690 52 8.5	-	pF pF pF
$C_{OSS\ eq}$(1)	Equivalent output capacitance	V_{GS} = 0, V_{DS} = 0 to 496 V		16.6		pF
R_g	Gate input resistance	f=1 MHz open drain	-	4	-	Ω
Q_g Q_{gs} Q_{gd}	Total gate charge Gate-source charge Gate-drain charge	V_{DD} = 496 V, I_D = 4.2 A, V_{GS} = 10 V *(see Figure 18)*	-	27 4 16	-	nC nC nC

1. $C_{oss\ eq}$. is defined as a constant equivalent capacitance giving the same charging time as C_{oss} when V_DS increases from 0 to 80% V_{DSS}

Table 6. Switching times

Symbol	Parameter	Test conditions	Min.	Typ.	Max	Unit
$t_{d(on)}$ t_r $t_{d(off)}$ t_f	Turn-on delay time Rise time Turn-off-delay time Fall time	V_{DD} = 310 V, I_D = 4.2 A, R_G = 4.7 Ω, V_{GS} = 10 V *(see Figure 17)*	-	12 8 40 21	-	ns ns ns ns

Obsolete Product(s) - Obsolete Product(s)

Table 7. Source drain diode

Symbol	Parameter	Test conditions	Min.	Typ.	Max	Unit
I_{SD} I_{SDM} (1)	Source-drain current Source-drain current (pulsed)		-		4.2 16.8	A A
V_{SD} (2)	Forward on voltage	I_{SD} = 4.2 A, V_{GS} = 0	-		1.5	V
t_{rr} Q_{rr} I_{RRM}	Reverse recovery time Reverse recovery charge Reverse recovery current	I_{SD} = 4.2 A, di/dt = 100 A/µs V_{DD}= 60 V *(see Figure 19)*	-	290 1900 13		ns nC A
t_{rr} Q_{rr} I_{RRM}	Reverse recovery time Reverse recovery charge Reverse recovery current	I_{SD} = 4.2 A, di/dt = 100 A/µs V_{DD}= 60 V T_J = 150 °C *(see Figure 19)*	-	320 2200 14		ns nC A

1. Pulse width limited by safe operating area
2. Pulsed: pulse duration = 300 µs, duty cycle 1.5%

Table 8. Gate-source Zener diode

Symbol	Parameter	Test conditions	Min.	Typ.	Max.	Unit
$V_{(BR)GSO}$	Gate-source breakdown voltage	I_{GS}= ± 1 mA, I_D=0	30	-	-	V

The built-in back-to-back Zener diodes have been specifically designed to enhance not only the device's ESD capability, but also to make them capable of safely absorbing any voltage transients that may occasionally be applied from gate to source. In this respect, the Zener voltage is appropriate to achieve efficient and cost-effective protection of device integrity. The integrated Zener diodes thus eliminate the need for external components.

Obsolete Product(s) - Obsolete Product(s)

2.1 Electrical characteristics (curves)

Figure 2. Safe operating area for I²PAKFP

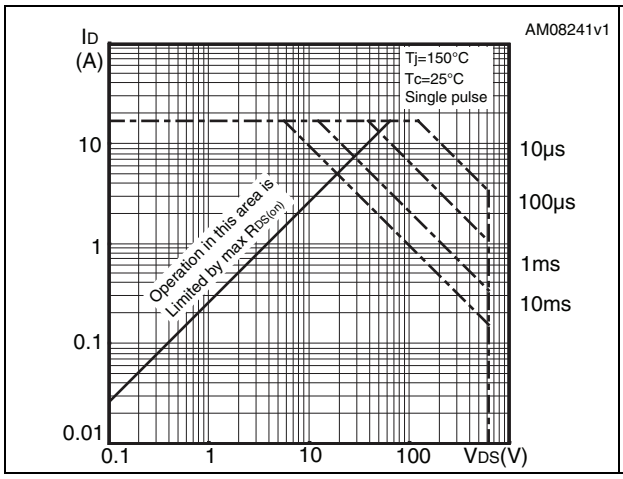

Figure 3. Thermal impedance for I²PAKFP

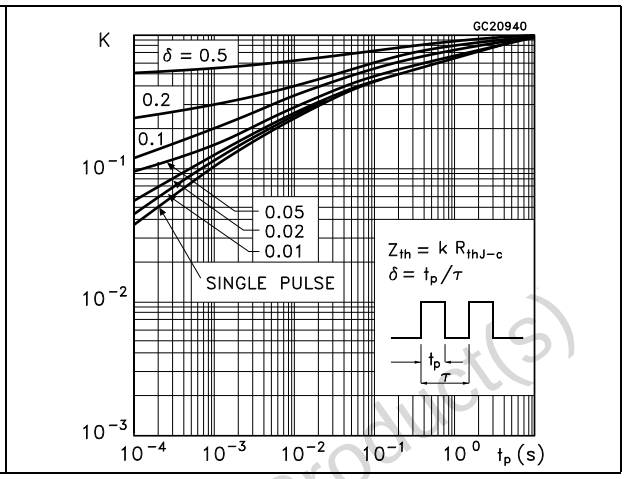

Figure 4. Safe operating area for TO-220

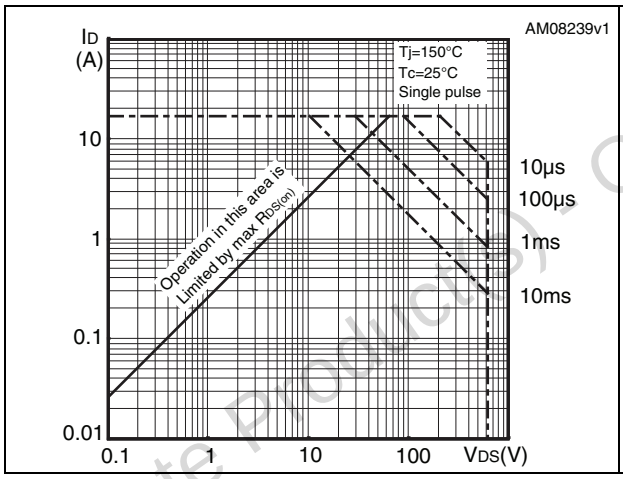

Figure 5. Thermal impedance TO-220

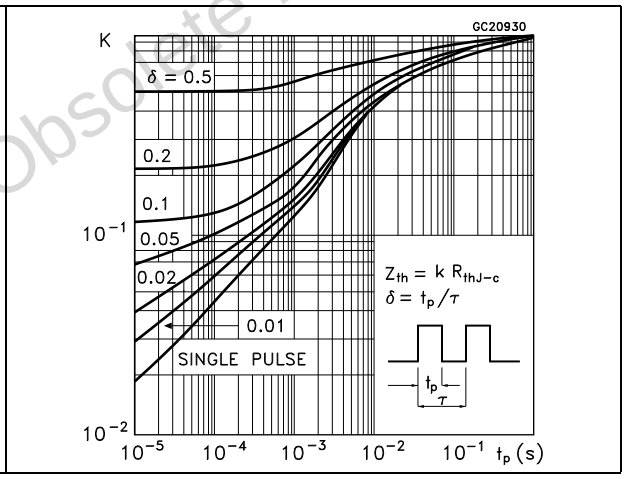

Figure 6. Output characteristics

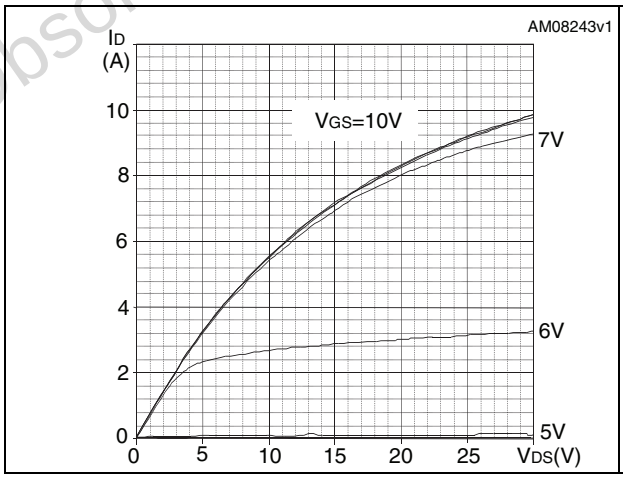

Figure 7. Transfer characteristics

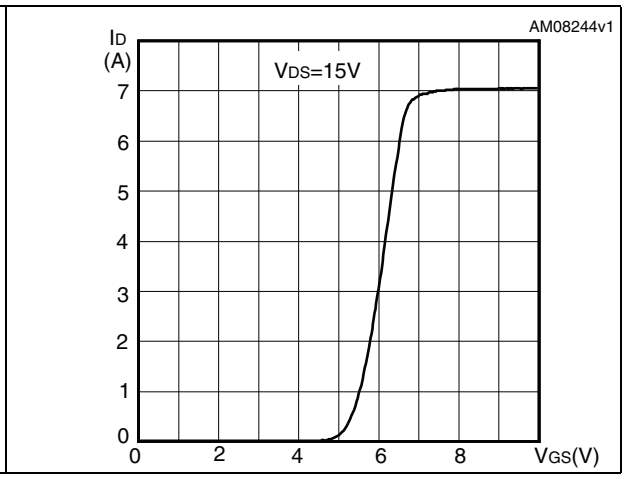

Obsolete Product(s) - Obsolete Product(s)

Figure 8. Gate charge vs gate-source voltage

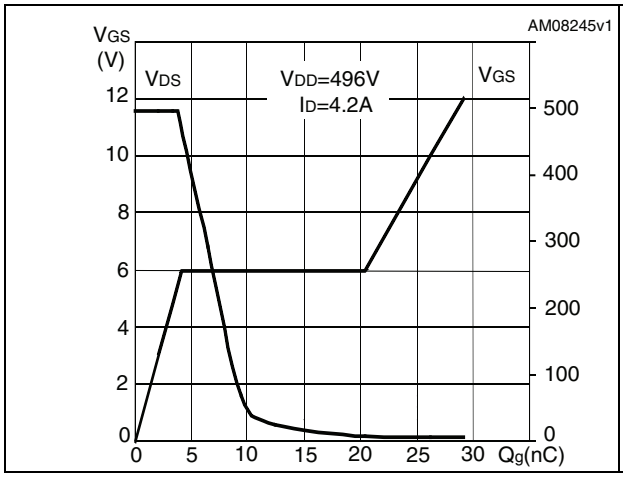

Figure 9. Static drain-source on-resistance

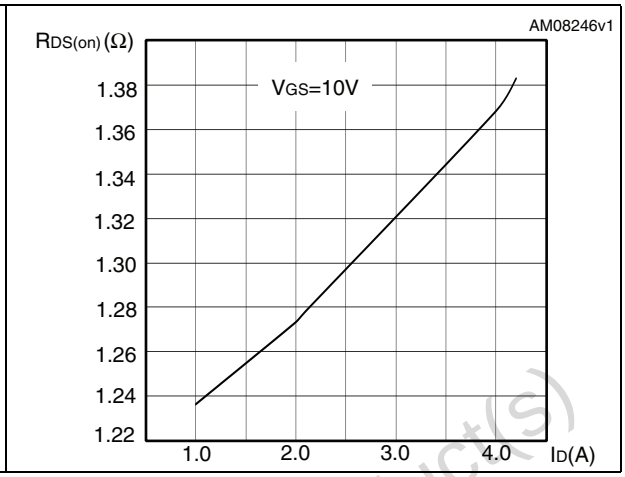

Figure 10. Capacitance variations

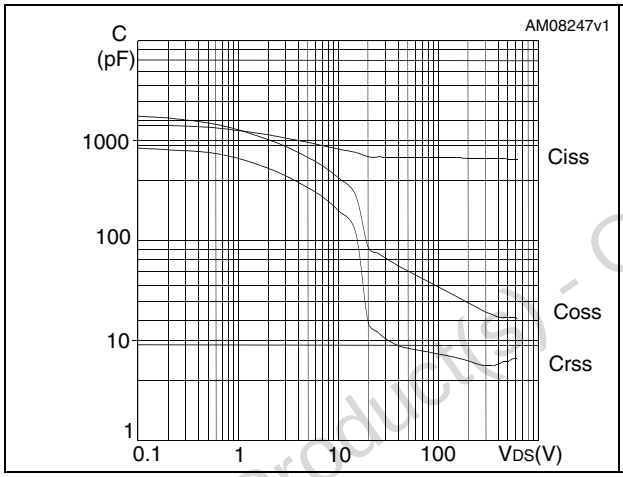

Figure 11. Output capacitance stored energy

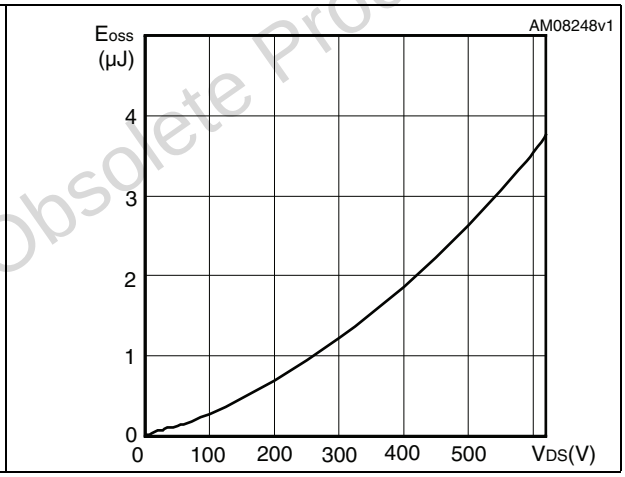

Figure 12. Normalized gate threshold voltage vs temperature

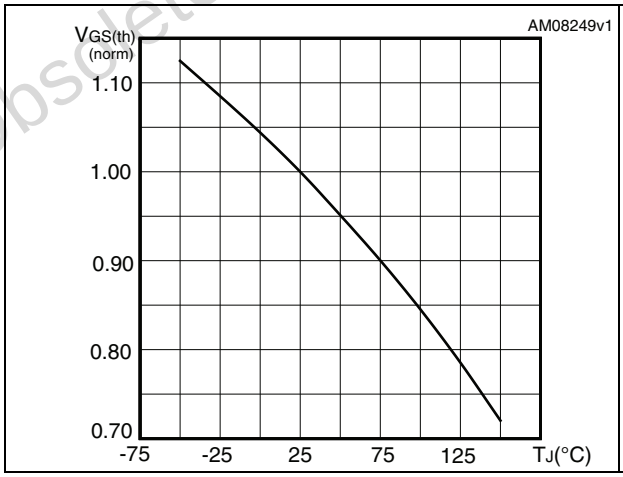

Figure 13. Normalized on-resistance vs temperature

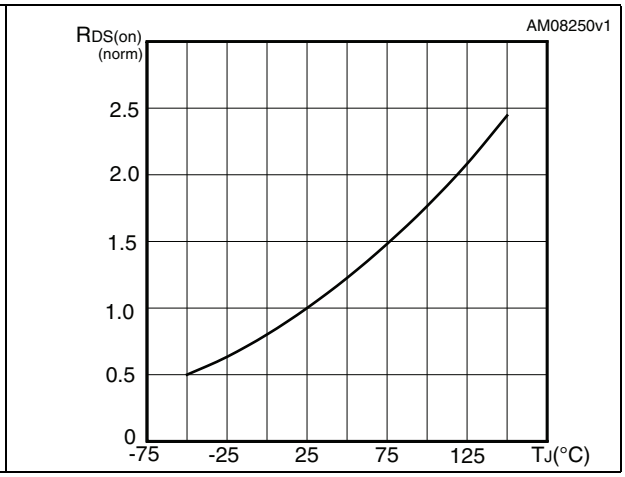

Obsolete Product(s) - Obsolete Product(s)

Figure 14. Source-drain diode forward characteristics

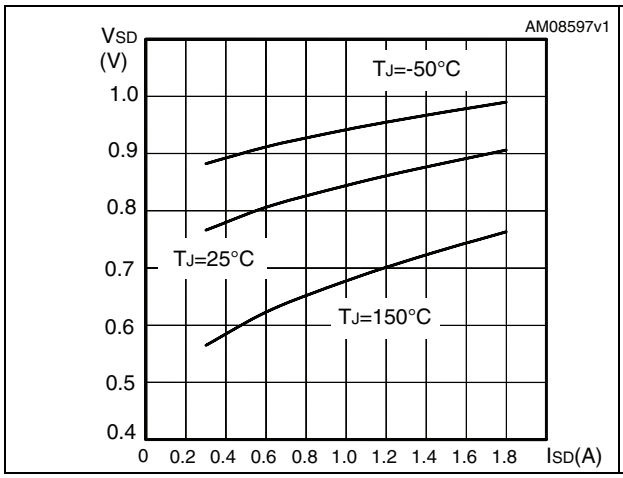

Figure 15. Normalized B_{VDSS} vs temperature

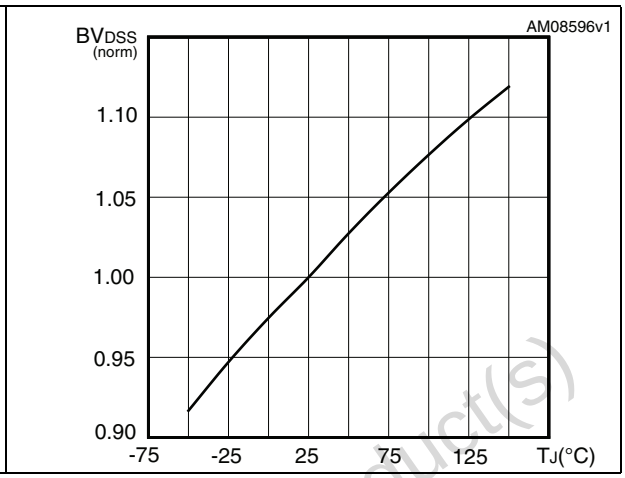

Figure 16. Maximum avalanche energy vs starting T_j

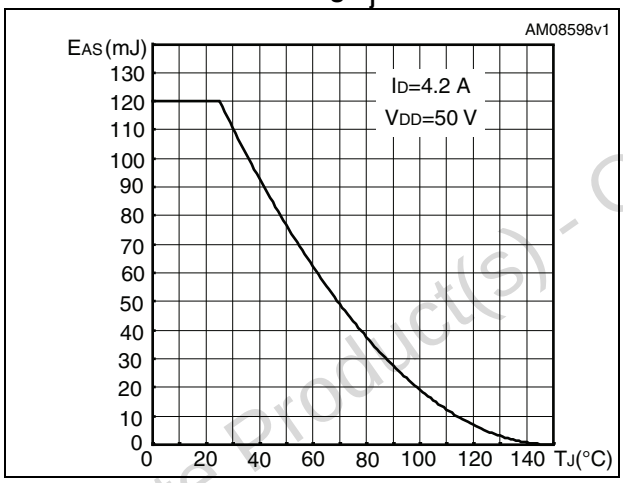

Obsolete Product(s) - Obsolete Product(s)

3 Test circuits

Figure 17. Switching times test circuit for resistive load

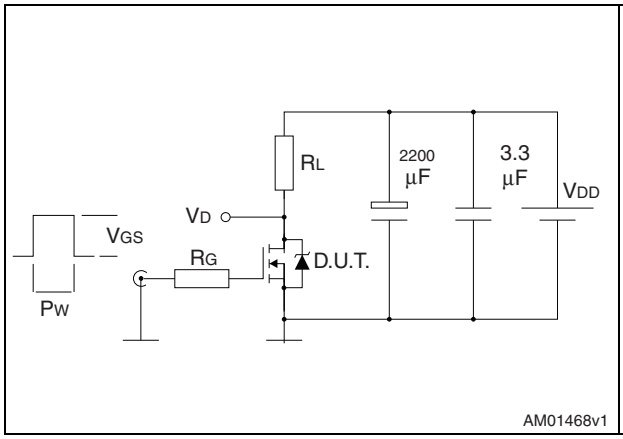

Figure 18. Gate charge test circuit

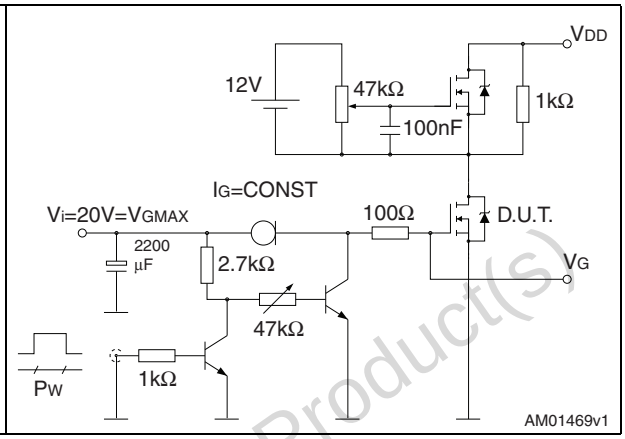

Figure 19. Test circuit for inductive load switching and diode recovery times

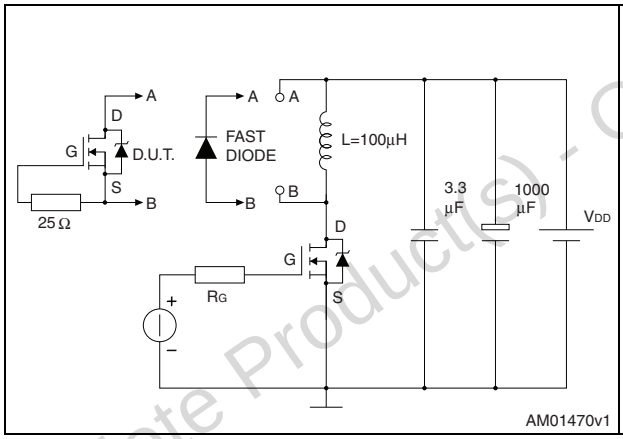

Figure 20. Unclamped inductive load test circuit

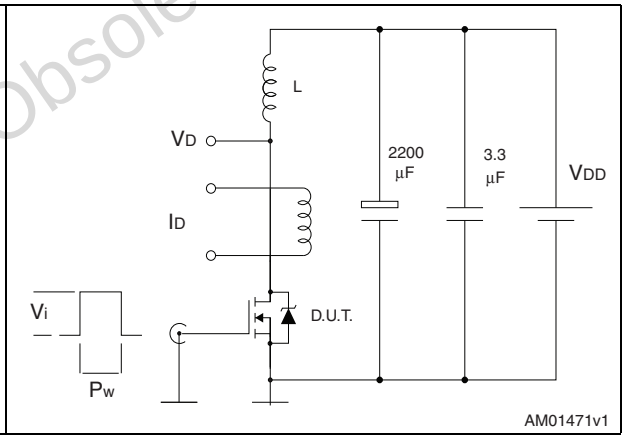

Figure 21. Unclamped inductive waveform

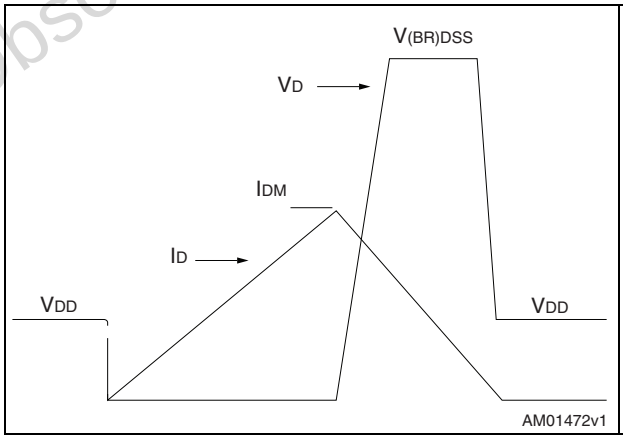

Figure 22. Switching time waveform

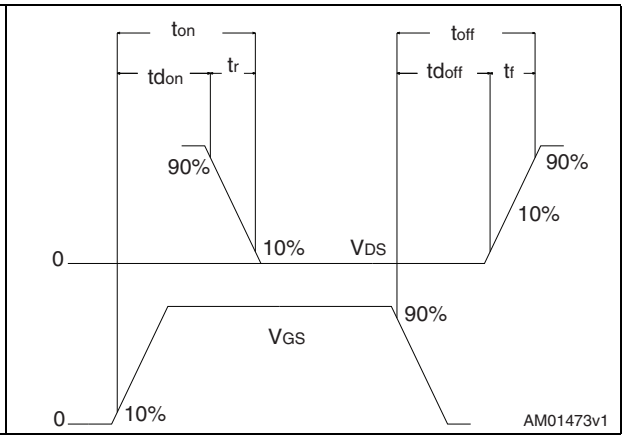

Obsolete Product(s) - Obsolete Product(s)

4 Package mechanical data

In order to meet environmental requirements, ST offers these devices in different grades of ECOPACK® packages, depending on their level of environmental compliance. ECOPACK® specifications, grade definitions and product status are available at: *www.st.com*. ECOPACK® is an ST trademark.

Obsolete Product(s) - Obsolete Product(s)

Table 9. I²PAKFP (TO-281) mechanical data

Dim.	mm		
	Min.	Typ.	Max.
A	4.40	-	4.60
B	2.50		2.70
D	2.50		2.75
D1	0.65		0.85
E	0.45		0.70
F	0.75		1.00
F1			1.20
G	4.95		5.20
H	10.00		10.40
L1	21.00		23.00
L2	13.20		14.10
L3	10.55		10.85
L4	2.70		3.20
L5	0.85		1.25
L6	7.30		7.50

Figure 23. I²PAKFP (TO-281) drawing

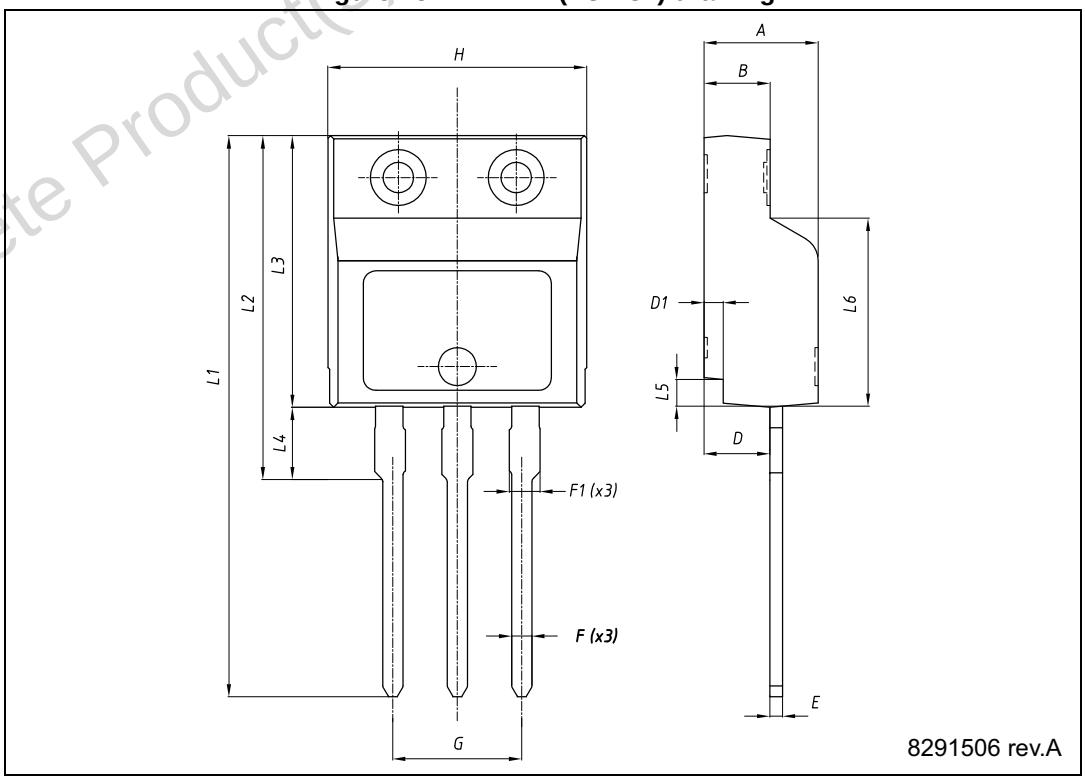

Obsolete Product(s) - Obsolete Product(s)

Table 10. TO-220 type A mechanical data

Dim.	mm		
	Min.	Typ.	Max.
A	4.40		4.60
b	0.61		0.88
b1	1.14		1.70
c	0.48		0.70
D	15.25		15.75
D1		1.27	
E	10		10.40
e	2.40		2.70
e1	4.95		5.15
F	1.23		1.32
H1	6.20		6.60
J1	2.40		2.72
L	13		14
L1	3.50		3.93
L20		16.40	
L30		28.90	
∅P	3.75		3.85
Q	2.65		2.95

Obsolete Product(s) - Obsolete Product(s)

Figure 24. TO-220 type A drawing

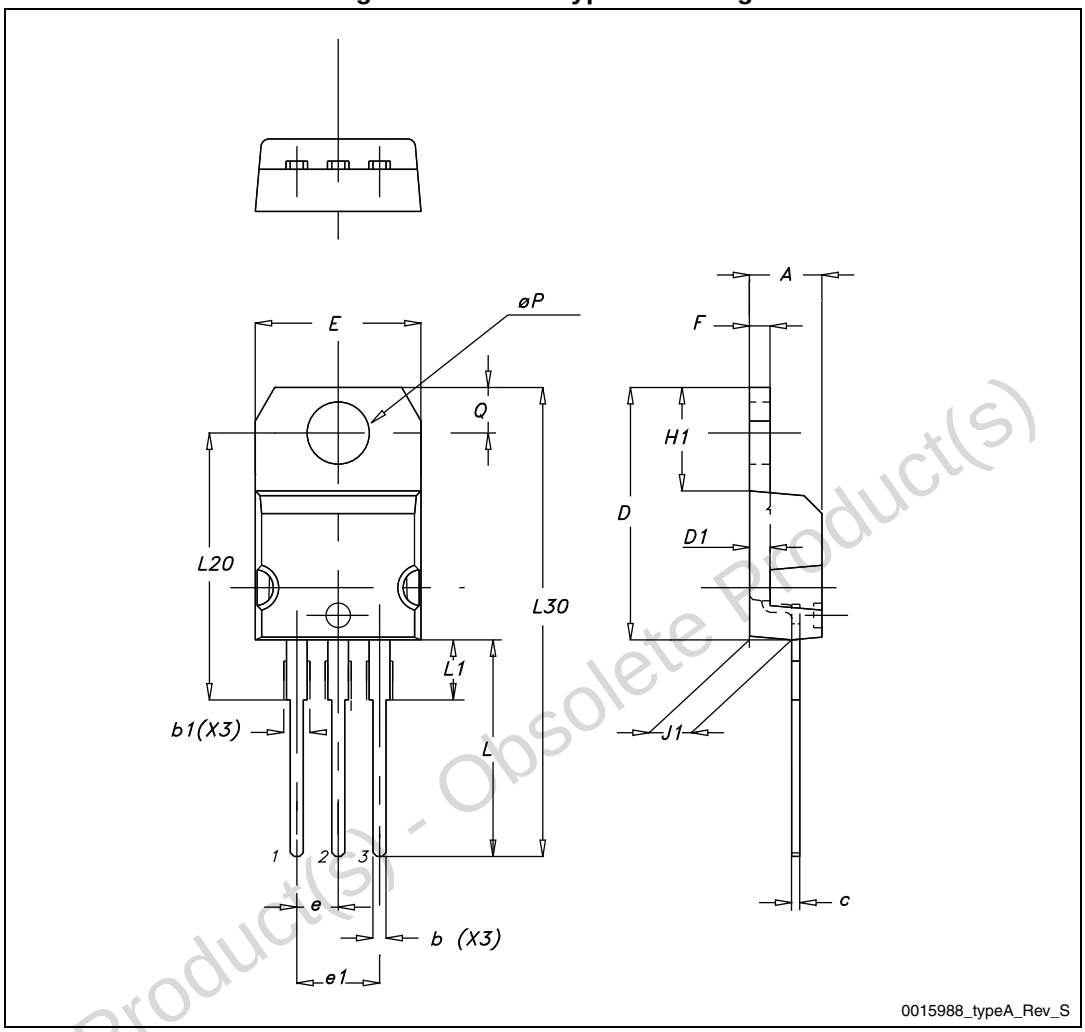

Obsolete Product(s) - Obsolete Product(s)

5 Revision history

Table 11. Document revision history

Date	Revision	Changes
25-Mar-2013	1	First release.

Obsolete Product(s) - Obsolete Product(s)

Please Read Carefully:

Information in this document is provided solely in connection with ST products. STMicroelectronics NV and its subsidiaries (“ST”) reserve the right to make changes, corrections, modifications or improvements, to this document, and the products and services described herein at any time, without notice.

All ST products are sold pursuant to ST’s terms and conditions of sale.

Purchasers are solely responsible for the choice, selection and use of the ST products and services described herein, and ST assumes no liability whatsoever relating to the choice, selection or use of the ST products and services described herein.

No license, express or implied, by estoppel or otherwise, to any intellectual property rights is granted under this document. If any part of this document refers to any third party products or services it shall not be deemed a license grant by ST for the use of such third party products or services, or any intellectual property contained therein or considered as a warranty covering the use in any manner whatsoever of such third party products or services or any intellectual property contained therein.

UNLESS OTHERWISE SET FORTH IN ST’S TERMS AND CONDITIONS OF SALE ST DISCLAIMS ANY EXPRESS OR IMPLIED WARRANTY WITH RESPECT TO THE USE AND/OR SALE OF ST PRODUCTS INCLUDING WITHOUT LIMITATION IMPLIED WARRANTIES OF MERCHANTABILITY, FITNESS FOR A PARTICULAR PURPOSE (AND THEIR EQUIVALENTS UNDER THE LAWS OF ANY JURISDICTION), OR INFRINGEMENT OF ANY PATENT, COPYRIGHT OR OTHER INTELLECTUAL PROPERTY RIGHT.

ST PRODUCTS ARE NOT AUTHORIZED FOR USE IN WEAPONS. NOR ARE ST PRODUCTS DESIGNED OR AUTHORIZED FOR USE IN: (A) SAFETY CRITICAL APPLICATIONS SUCH AS LIFE SUPPORTING, ACTIVE IMPLANTED DEVICES OR SYSTEMS WITH PRODUCT FUNCTIONAL SAFETY REQUIREMENTS; (B) AERONAUTIC APPLICATIONS; (C) AUTOMOTIVE APPLICATIONS OR ENVIRONMENTS, AND/OR (D) AEROSPACE APPLICATIONS OR ENVIRONMENTS. WHERE ST PRODUCTS ARE NOT DESIGNED FOR SUCH USE, THE PURCHASER SHALL USE PRODUCTS AT PURCHASER’S SOLE RISK, EVEN IF ST HAS BEEN INFORMED IN WRITING OF SUCH USAGE, UNLESS A PRODUCT IS EXPRESSLY DESIGNATED BY ST AS BEING INTENDED FOR “AUTOMOTIVE, AUTOMOTIVE SAFETY OR MEDICAL” INDUSTRY DOMAINS ACCORDING TO ST PRODUCT DESIGN SPECIFICATIONS. PRODUCTS FORMALLY ESCC, QML OR JAN QUALIFIED ARE DEEMED SUITABLE FOR USE IN AEROSPACE BY THE CORRESPONDING GOVERNMENTAL AGENCY.

Resale of ST products with provisions different from the statements and/or technical features set forth in this document shall immediately void any warranty granted by ST for the ST product or service described herein and shall not create or extend in any manner whatsoever, any liability of ST.

ST and the ST logo are trademarks or registered trademarks of ST in various countries.
Information in this document supersedes and replaces all information previously supplied.
The ST logo is a registered trademark of STMicroelectronics. All other names are the property of their respective owners.

© 2013 STMicroelectronics - All rights reserved

STMicroelectronics group of companies

Australia - Belgium - Brazil - Canada - China - Czech Republic - Finland - France - Germany - Hong Kong - India - Israel - Italy - Japan - Malaysia - Malta - Morocco - Philippines - Singapore - Spain - Sweden - Switzerland - United Kingdom - United States of America

www.st.com

Obsolete Product(s) - Obsolete Product(s)